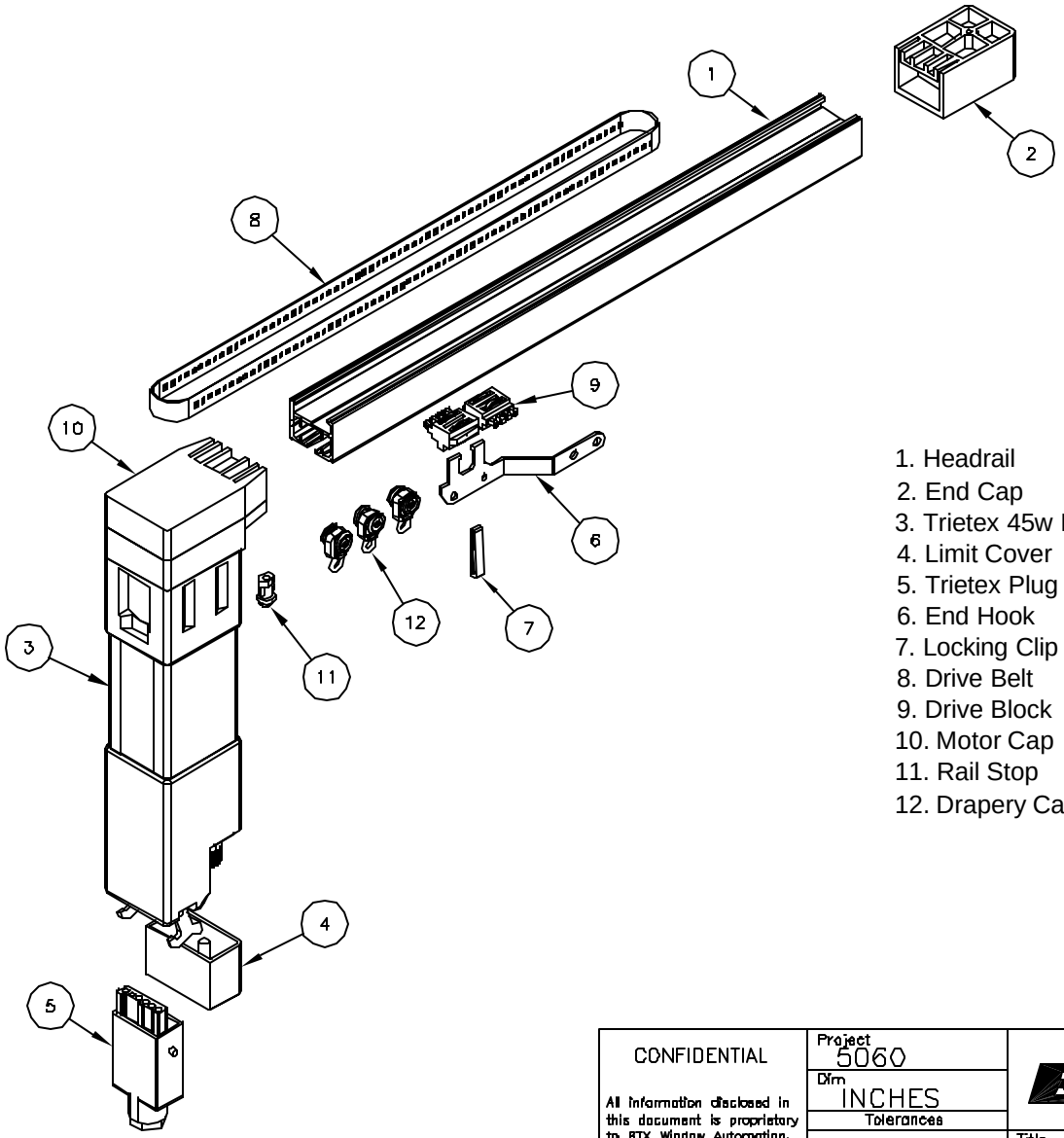

1. Headrail
2. End Cap
3. Trietex 45w Motor
4. Limit Cover
5. Trietex Plug
6. End Hook
7. Locking Clip
8. Drive Belt
9. Drive Block
10. Motor Cap
11. Rail Stop
12. Drapery Carrier

CONFIDENTIAL

All information disclosed in this document is proprietary to BTX Window Automation. Holder agrees to maintain it in confidence and must not replicate or reveal this information in any manner.

Project 5060

Dim INCHES

Tolerances

.XX ± .015
.XXX ± .005
ANG ± .5°

By: G. BENNETT

BTX™

BTX Window Automation
10810 Alder Circle
Dallas, Texas 75238
(214) 348-1010
(214) 343-3444 FAX

Title 5060 EXPLODED VIEW (45W)

Size A | Mat'l: | Dwg No: 220mtrasy4500 | Rev

Date: 09-MAR-00 | Scale: NTS | Sheet 1 of 1